
RK-CRAFTS



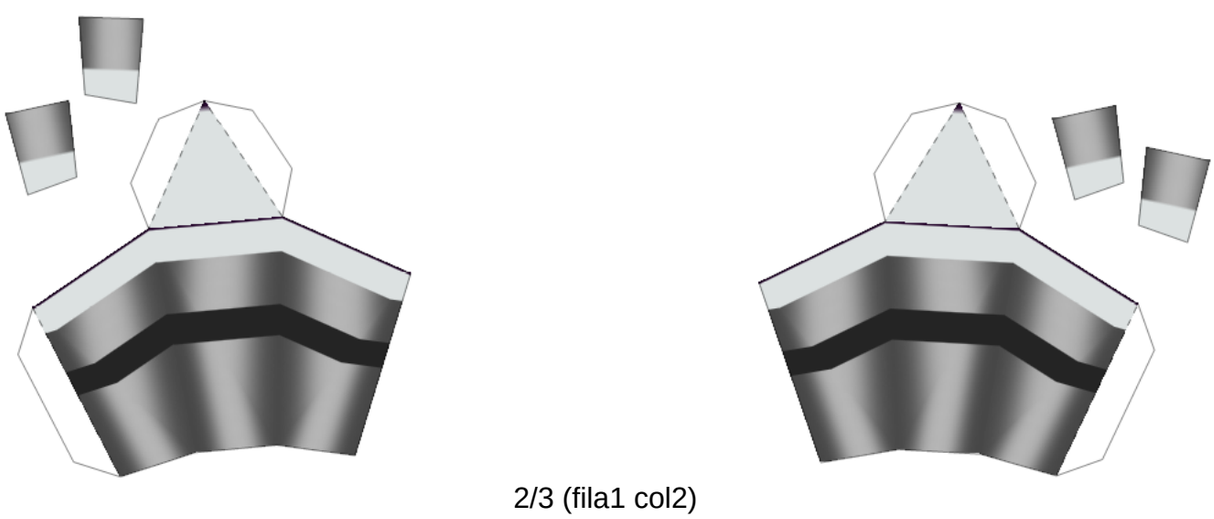

2/3 (fila1 col2)

